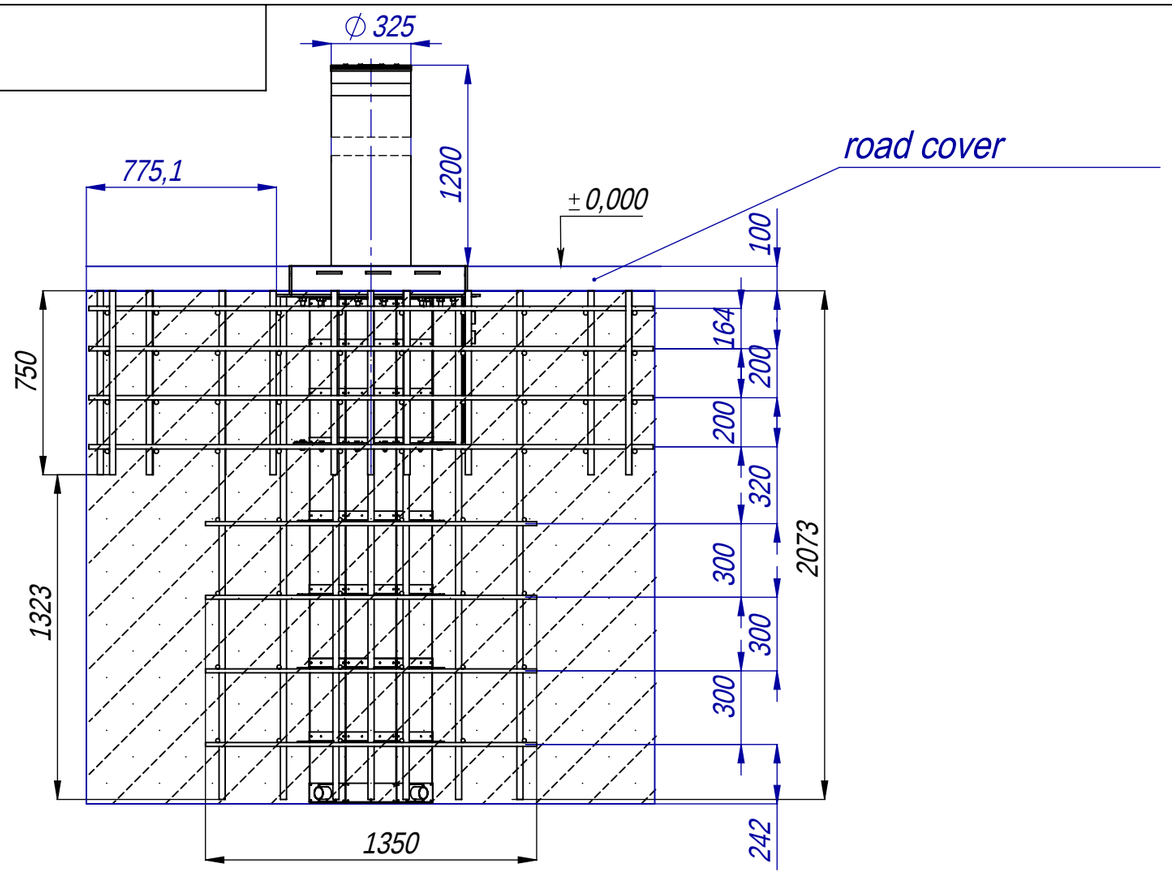

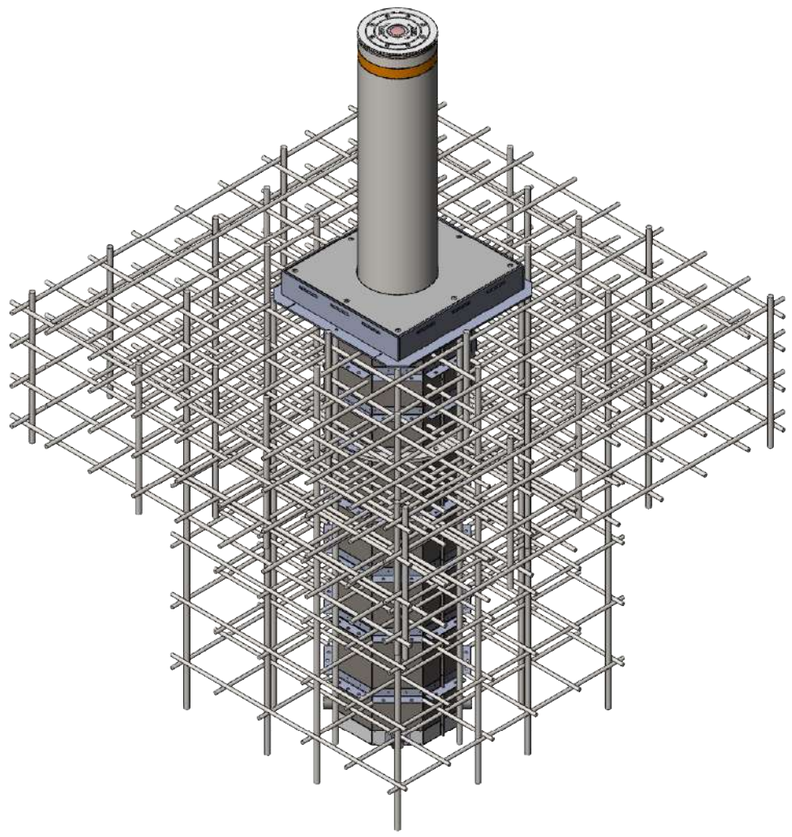

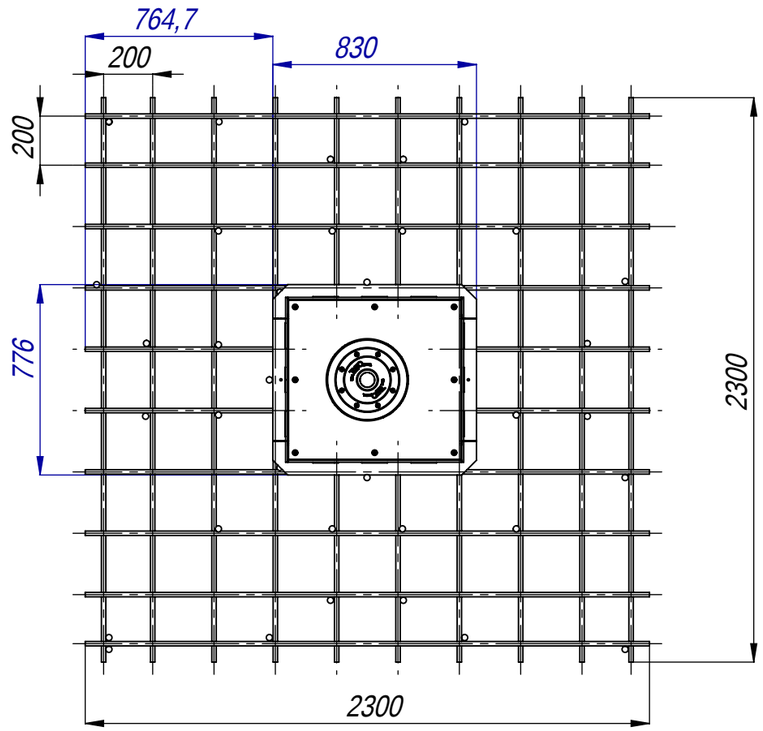

1 = 8.5 ^3

					RB 342 with reinforcing cage
					High security Bollard M50(K12)
				29.08.2019	1:25
					1 1

\\10.0.3.4\02_ \05_ \342 (rev2,5)SW17 archiv\Σ≤ 342\RB 342 SET with 1 bolards\